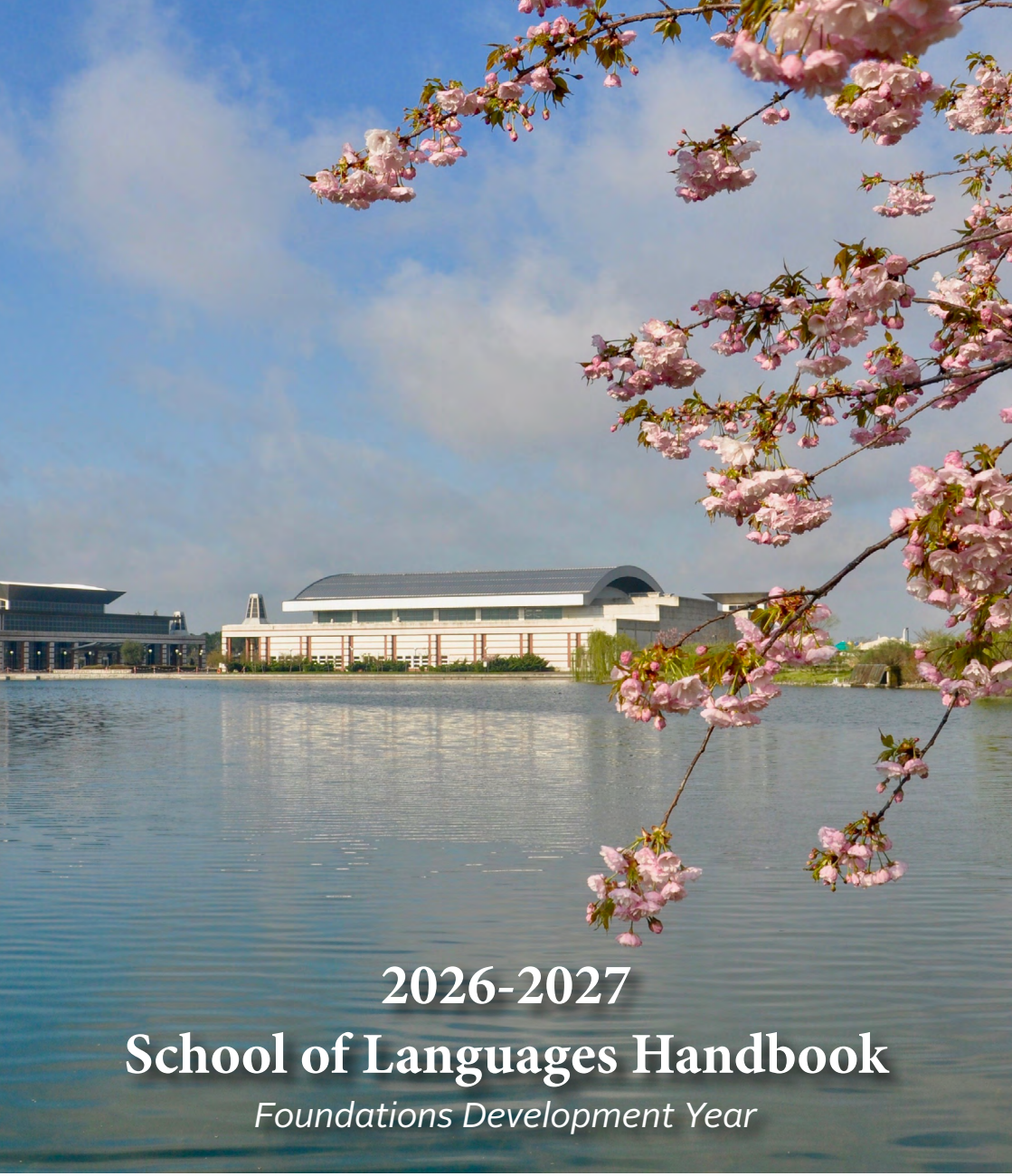

2026-2027
School of Languages Handbook

Foundations Development Year

Sabancı Üniversitesi

Sabancı Üniversitesi

The information in this booklet is subject to the decisions of Executive Board of Sabancı University and the regulations approved by YOK (The Higher Education Council). Throughout your studies at Sabancı University, it is your responsibility to follow all new and updated arrangements and regulations via our official website.

Contents

01 School of Languages Director
02 School of Languages Program Coordinator
03 School of Languages (SL) Courses
04 Level Descriptions For The Foundations Development Year (FDY) English Program
06 Assessment of English Courses
07 Center for Individual and Academic Support (CIAD)
08 Student with Special Needs Support Unit (SSN)
09 English Language Assessment Exam (ELAE)
12 Spring Freshman – General Information
13 School of Languages Teaching Principles
15 School of Languages- General Rules
24 Frequently Asked Questions
28 School of Languages Foundations Development Year English Program Exit Level Descriptors
29 School of Languges Route Progressions Maps
36 Overview of Route Progressions & CEFR Levels
37 Student Comments on School of Languages

Dear Students,

Welcome to the School of Languages and Foundations Development Year.

The aim of this handbook is to give you detailed information about the Foundations Development Year (FDY), the courses we offer, course assessment and general rules and expectations. Please read all the information very carefully and consult your instructors, the Program Coordinator, Pınar Demiral Gündüz or myself if you have any queries.

The FDY courses offered by the School of Languages (SL) are an integral part of the education offered at Sabancı University and aim to provide you with the necessary foundation skills and knowledge to excel in your academic studies. More specifically, we would like to help you to attain an excellent level of language proficiency, develop academic skills in the areas of listening, speaking, reading and writing, develop learner autonomy and study skills, critically appraise your own skills and abilities, develop creative and critical thinking, and be well equipped with general background knowledge.

I would also like to mention that the FDYdiffers from other 'preparatory' or 'Hazırlık' programs in Turkey in two important ways. One major difference is that our course assessment is not only exam-based; the fulfillment of course requirements plays a very important role in advancement from one level to another. Another difference is that our course materials are both theme-based and contentbased. In addition to helping you develop your English language proficiency and academic skills, these materials help you to expand. To this end, we have designed and developed our own set of course books, Beyond the Boundaries: English in an Academic Environment for use during the different routes of study you will take. We strongly believe that with this learning, you will go beyond the boundaries and develop an excellent level of language and academic skills as well as a knowledge base to help you in your academic studies.

We will do our best to support your learning during your time with us. For effective learning, however, it is vital that you attend all classes, study hard and regularly, participate actively in class, do the assigned homework, and be punctual in all aspects of your work. Please also make full use of the support systems and facilities available both in the School of Languages and in the University since these provide valuable opportunities for further learning and development.

I wish you all a very good academic year. I am certain that your learning experience at the School of Languages will be challenging but highly rewarding.

Jacqueline Einer
Director, School of Languages

School of Languages Program Coordinator

Dear Students,

Welcome to the School of Languages. And welcome to a journey of learning and developing, of exploration and discovery. This will be a challenging yet rewarding journey and will require time and patience as well as perseverance and motivation.

In the School of Languages some of you will be introduced for the first time to the English language and to the world of academia, while for others this will be an opportunity to strengthen and expand the skills and knowledge already available to you. Each and every one of you has come here with different learning experiences, different study habits, different levels of knowledge and motivation. Therefore, the time it takes and the strategies you need to employ to reach your destination will vary.

As the School of Languages Program Coordinator, you can contact me on all matters of an academic nature. More specifically, I can provide you with information and guidance on the academic support that can be offered by the School of Languages and by other units in the university. I can provide you with guidance in reflecting on your language development and in exploring effective study skills. You may also contact me to seek information about progression across routes in the School of Languages and the courses offered.

To consult on any academic matter, please feel free to contact me either by email (pinar.gunduz@sabanciuniv.edu) or phone (9741). My office is located in the School of Languages building (office number: 1008).

Enjoy your journey,

Pınar Gündüz
Program Coordinator, School of Languages

The School of Languages offers the courses below to the students:

1. **Non-credit Intensive English Courses:**

   ENG 0001 – English Route 1

   ENG 0002 - English Route 2

   ENG 0003 - English Route 3

   ENG 0004 - English Route 4

2. **Credit Courses:**

   AL102 Academic Literacies (Offered to students starting from their Freshman Year in Spring Semester)

   ENG 300 Professional Communication Skills in English

   World Languages: Ottoman Turkish, Arabic and Persian (offered to students starting from their Freshman Year)

   TUR 101 & 102 & 210 - Basic Turkish I & II and Intermediate Turkish I (offered to foreign students as a Second Languages)

Level Descriptions For The Foundations Development Year (FDY) English Program

English Route 1 - ENG 0001

This course aims to effectively and efficiently raise students' standard of English from a minimal level to one that allows for basic communication. This is achieved through intensive language support based on grammar, vocabulary and skills work as well as the use of theme-based and on-line learning materials. Throughout the course, you will be involved in active learning enhanced by technology.

English Route 2- ENG 0002

The aim of this course is to help students develop their language skills to be able to start to function effectively in a variety of written and spoken contexts in English. This is achieved through the use of content-based and on-line learning support materials which contribute to students' language knowledge as well as their knowledge of the world.

English Route 3 - ENG 0003

The aim of this course is to help students further develop their language skills to be able to function effectively in a variety of written and spoken contexts in English. Content-based and online support materials play a key role in supporting the learning process.

English Route 4 ENG 0004

At this level, students not only develop their abilities to read, write and speak very fluently and highly accurately in English, but also learn to become more advanced communicators who possess sufficient general knowledge to start their freshman studies. The course focuses on academic skills, uch as critical thinking. Content-based and on-line learning support materials play an essential role in achieving this aim.

General Information About Foundation Development Year

One academic year in FDY consists of fall and spring semesters, each of which is 16 weeks. Students' English level is determined according to English Language Assessment Exam (ELAE) at which level they start their education. For a successful completion of a level, students should fulfill the attendance requirements for a course and has to complete the level by successful performance at a given level, which is assessed through in-class work, mid-term examinations, final exam. Maximum education period for FDY is two academic years. Maximum education period calculation is being done as of 2014-2015 Academic year according to Law 6569 published on official gazette numbered 29187.

Please click the link below for further information:

https://mysu.sabanciuniv.edu/sr/en/foundation-development-year

Assessment of English Courses

The form and number of the assessments of English courses in all Routes are very similar. Your **overall grade** will be made up of course-based and exam-based assessment. All courses are 16 weeks long and the passing grade is 70%. The course assessments and exams are as follows:

Writing practice: Writing will be based on the kind of writing tasks that will be undertaken during the Freshman year.

How is writing assessed?

a) short answer questions
b) a longer piece of writing which is based on texts that you will be given.
c) a writing portfolio, which is a set of short writing tasks based on your course material and your experience as a student

During the course, you will be given support and guidance on how to approach these kinds of writing tasks. This will be done first of all through work in class. In addition, you will do a number of writing assignments, and you will receive written feedback from your instructor on these assignments. You will also have "one to one" tutorials with your instructor on your assignments. As you progress to higher levels and become a more experienced writer, you will be expected to produce longer and better quality written work.

Oral Assessment: Your oral skills will be assessed individually and/or through pair or group discussions.

Mid-term and Final exams: On each course you will have Midterm/Progress exams and a Final exam. These exams will test your ability in reading, listening, and use of grammar and vocabulary.

Language exams: There will be a number of short Use of English exams which will test your knowledge of the grammar and vocabulary which you have learnt on the course up to that point.

Attendance: You will be awarded points according to your level of attendance during the semester.

Homework and Participation: You will be assessed on your participation in class and attendance at tutorials, as well as on the quality of your homework.

At the start of each course, your teacher will give you details of the assessment tasks and exams on your course, the value of each assessment and exam, the submission dates and the criteria which are used to assess your work.

With hard work and determination, it is possible for you to successfully complete the program in one year and enter Freshman. For those of you who are starting in Route 4, passing the course in the first semester will be very challenging. There is a lot to learn about English in an academic context, but it is certainly worthwhile as you can start some of the University Courses earlier. In order to achieve this goal, you will need to work consistently throughout the entire 16 weeks. Good luck!

Individual and Academic Counsellors

As The Center for Individual and Academic Support, we aim to support our students' adaptation process to university life, which requires different responsibilities, in an easier, safer and active way. We aim to support our students academic and social development.

Mentorship Program

There is a peer support and solidarity program at Sabancı University, to ensure that every incoming student at Sabancı University has an easier time to adapt to academic and social life on campus. 10-15 incoming students (mentees) are matched to a senior peer counselor (mentor) who becomes their group leader.

The first person to contact when students experience academic, social or personal problems is their mentors. Your Mentors will guide you to the best unit that can help you.
Don't forget to meet with your mentors who will be wearing orange t-shirts during the orientaiton program!

Individual and Academic Counsellors

As The Center for Individual and Academic Support (CIAD) Counselors, we accompany you from the beginning to the end of your academic journey. As you counsellors we aim to to be there for you in your adaptation process to Sabancı University and in other areas such as making your dreams and wishes come true, fulfilling the responsibilities of your new life, and understanding the academic requirements of our university. In individual sessions, which operate in accordance with confidentiality principles, CICO's will listen to you in a non- judgemental way and point you in the right direction.You can ask for help to identify your problems, understand how they affect your life and to determine actions you can take to develop in those areas. Sharing them with an experienced and objective counselor will help you discover different options to cope with difficulties.

You can find information about your CICO on MySU and contact them to get an appointement. You can attend the workshops that interest you (Stress management, psychological resilience. Motivation etc.) organized by CICO team by following the announcements on MySu.

You can reach us via ciad@sabanciuniv.edu

The Academic Support Program (ASP),
Another opportunity that CIAD provides you is academic assistance in the courses you will take after the Foundation Development Year. The Academic Support Program (ASP), with its weekly "Peer Study/Discussion Sessions", which form the core of the program, helps you become individuals who focus on learning to learn and on lifelong learning, particularly through your university courses(MATH 101/102, NS 101/102, SPS 101/102).In addition to these core ASP sessions, we support you academic skills development through workshops and basic knowledge-reminder sessions. You can follow discussions on the local and cultural agenda at ASP's Thematic Sessions and Seminars and participate in social activities such as meet-up and game nights. You can follow ASP's activities on SUCourse and mySU or on our social media accounts.
E-mail: adp@sabanciuniv.edu
Instagram: adp_asp

Student with Special Needs Support Unit (SSN)

Who is a person with special needs?
It is a person with difficulties in adapting to social life and meeting their daily needs due to the permanent or temporary loss of physical, mental, psychological, emotional and social abilities at various degrees for any reason at birth or afterwards and who needs assistance that may be in the form of protection, treatment, care, rehabilitation, counseling or various arrangements.
Assistance:

- Ensure that the arrangements needed by the students with special needs regarding education, research and campus life are made either directly or by guiding the relevant units.

- Ensure that necessary arrangements are made for course materials, laboratory and field studies, and exams within the scope of the courses taken by students with special needs, together with the relevant teaching staff and faculties.

- Determine the students who will work on a voluntary or part-time basis to assist students with special needs in their course work, together with the Academic Support Program and the relevant instructors.

- Provide technological support that may be necessary for students with special needs, together with the Information Technology unit.

- Carry out awareness-raising activities on disability at the university.

- Guide the teaching staff about necessary communication, classroom management, and teaching methods, on both a general and individual basis.

- Provide the necessary close counseling support to students with special needs.

specialneeds@sabanciuniv.edu.

Please follow the university's web site for the most updated information about 2025-2026 Academic Year English Language Assessment Exam.

The School of Languages (SL) is responsible for ensuring that all students entering their Freshman year have the required level of English as well as the academic skills needed for success at SU. This is assessed through the SL's own English Language Assessment Exam (the ELAE), a proficiency exam with a pre-determined standard of achievement. The ELAE is a test of English proficiency which tests your reading, listening and writing ability. Any student wishing to enter the degree courses must pass the ELAE or an internationally recognized proficiency exam at an equivalent level or they must get an overall score of 70% or above from FDY Routes 4.
Please click to see the ELAE details.

Which FDY students can take the ELAE?

1. Students who have won a place at Sabancı University in the University Placement Exam.
2. Students who have not gained the right to start their faculty studies after studying at FDY for one academic year.
3. Students who did not hand in a valid external exam score

When can I take the ELAE?

The ELAE is administered three times during the academic year:

ELAE 1- at the beginning of the academic year – in August or September: For those students whose status is inactive, for those students who have the right to continue to study at FDY* and for new students who successfully passed ELAE stage 1.

ELAE 2- in January: For those students whose status is inactive, for those students who have the right to continue to study at FDY*. *ELAE 3- at the end of the academic year – in June: For those students whose status is inactive, for those students who have the right to continue to study at FDY* and for students who have not gained the right to start their faculty studies after studying one academic year at FDY .*

**These students may be using their right or not.*

Is there a make-up for the ELAE?

There is no make-up for the ELAE.

How are the ELAE Stage 2 results announced?

The ELAE results are announced according to the following letter grades:

A - SL : 90 - 100
B - SL : 80 - 89
C - SL : 70 - 79 (satisfactory grade)
D - UL : 60 - 69
E - UL : 50 - 59
F - UL : 0 - 49

SL: Satisfactory in the ELAE
UL: Unsatisfactory in the ELAE
NA: Non attendance (Evaluated as UL)
EL: Exempt from the ELAE by submitting a valid external exam score

Can I take another proficiency exam score and use that instead of taking the ELAE?

In accordance with the change in the Instruction Letter of the Higher Education Council (YÖK) regarding Foreign Language Education and Foreign Language Medium Education and the decision taken by the SU

Academic Council, valid scores from some external exams will exempt students from the SU Foundation Development Year. The following link gives information about these exams. Please consult SL Directorate for further information.

http://www.sabanciuniv.edu/en/faculties-programs-exemption-exams

Exams	Length of Validity	Minimum score needed
PTE Academic	2 years	71 (minimum 67 points from each section)
TOEFL IBT	2 years	85
CAE	3 years	C
CPE	3 years	C
KPDS	5 years	90
ÜDS	5 years	90
YDS	2 years	90
ELAE	2 years	70

According to Article 6/3d of the OSYM (Student Selection and Placement Centre) Directive on Determination of Equivalence of Foreign Language Exams, a foreign language exam given in Turkey has to take place in the buildings of state universities for conferral and continuity of its equivalence.

Can doing lots of exam practice for the ELAE help me pass?

The ELAE is a language proficiency exam which tests your language proficiency in reading, listening and writing. Therefore, you need to attend classes regularly to learn English. Also, class materials are prepared to help you with the questions in the exam which means your attendance will enable you to learn English and prepare for the exam.
Please click to see the ELAE details.

What happens if I receive an Unsatisfactory grade in the ELAE?

If you are a student who has just won a place at SU, you will be placed at one of the Routes in FDY. If you are a student who already studied one year at FDY, you may have the right to choose to study at FDY again. Please contact the School of Languages Admin Office for more information.

Spring Freshman – General Information

CIP 101 (no credit)

- IF 100 (3 credits / 2 hours lecture + 2 hours recitation = 4 hours)
- NS 101 (4 credits / 2 hours video lecture+ 2 hours lecture + 2 hours recitation = 6 hours)
- MATH 101 (3 credits / 3 hours lecture + 2 hours recitation = 5 hours) (Students who pass the MATH 101 exemption exam can take MATH 102 with the same credits and hours)
- HIST 191 (2 credits / 2 hours lecture)
- TLL 101 (2 credits / 2 hours lecture)
- SPS 101 (3 credits / 2 hours lecture + 2 discussion = 4 hours)

Spring Freshman

Route 4 students who score 70% or above as their total overall grade, as well as, those students who submit an external exam result of the appropriate level within the required period are admitted to the University as Spring Freshman students during the Spring semester. This will give those of you who pass the opportunity to complete some of the core University courses, which are normally required of students in their Freshman year, during the second semester. Courses you may take are as following:

- PERS / Persian
- TLL / Ottoman Turkish

- In WLC beginners start with basic course 110/110D, others may start with a higher level course depending on the result of the Placement Test. All WLCs are offered 5 hours a week, 3 credits. Additional language courses affect Grade Point Average (GPA) but do not count towards graduation requirements for FENS students.

Please also note that there may be some changes in the courses offered to students. If this is the case, students will be informed by the FDP Directorate in due course.

For further details: arzu@sabanciuniv.edu

School of Languages Teaching Principles - Student Version

Dear SL Students,
The following teaching principles are based on our professional experience and research with SL teachers and students between 2019 and 2021. We believe these principles help us to ensure quality in teaching and learning, guiding us in our efforts to foster greater learner independence and promote commitment to students' development as lifelong learners.

As students and as teachers, we believe in:

- creating a safe, cooperative and enjoyable learning environment where...
    1. ... relationships between teachers and students and among peers are based on mutual trust, respect and patience which leads to effective communication and has a positive effect on learners' understanding of the language

- a learner-centred teaching approach which...
    1. promotes learner motivation and engagement through the awareness of learner attention spans
    2. is based on differentiated and meaningful learning opportunities, active learning, cooperation and team work, principled flexibility, and choice in learning

- providing individualised support to learners by...
    1. helping them set challenging and purposeful learning goals
    2. fostering their use of rich practice opportunities
    3. encouraging them to take responsibility for their own learning
    4. guiding them towards success

- having systems in place to help learners plan their learning effectively and to develop greater awareness of...
    1. ...their own learning, progress and achievement through self-reflection opportunities and a systematic approach to attendance and homework

- providing individual and group tutorials as well as extra support and feedback opportunities, which...
    1. help students on their individual learning paths
    2. encourage them to go outside their comfort zones taking initiative to explore further opportunities
    3. recognise the role of mistakes in progress
    4. allow for peers to support each other in their learning

- providing a wide variety of learning resources and materials which...
    1. help learners make connections between their learning
    2. are based on rich and meaningful content fostering learner curiosity
    3. help learners gain greater knowledge of the world and of different cultures while also preparing them for their faculty studies and real-life situations

- the ongoing personal and professional development of teachers as lifelong learners who...
    1. respect shared goals within a team
    2. recognise learners and colleagues as individuals with their own unique potential, needs, and interests

3. build effective relationships with their students
4. are open to different ideas
5. welcome feedback from their students and colleagues

- teacher qualities and attitudes that foster engagement in learning...

1. being devoted to the profession
2. being approachable
3. having confidence but also humility
4. recognising the role of humour and fun
5. valuing learners' ideas, knowledge, skills and decision-making abilities

We are grateful to our students for their valuable contributions in the preparation of this document:
Ahmet Bera Efe, Ayşegül Özen, Barış Özkılıç, Begüm Topsever, Buse Merter, Can Onat Yaren, Eren Yücel, Göksu Gültekin, Mustafa Topçu, and Seren Deletioğlu

© SU School of Languages, 2021

1. SL Learner Conduct

A positive, effective learning environment and atmosphere is key to effective learning. School of Languages students are responsible, respectful, and courteous. They maintain constructive behaviour, use appropriate language with their peers and university staff members, and have a positive attitude towards learning.

SL students punctually attend and actively participate in classes and tutorials, ready with their course books and other learning materials. They are on task in class, and they strive to complete all learning tasks in and outside the class to the best of their ability. SL students proactively and regularly participate in lessons by offering ideas, taking notes, asking questions relevant to the task, and actively and attentively listening to others. Students are aware that learning a language is a life-long journey, and that they should make every effort to improve their language skills. For this reason, they communicate with their teachers and peers in English in and outside the class, to the best of their ability.

SL students familiarise themselves with and adhere to the guidelines and procedures shared by SL teachers or the school administration. Students keep themselves up to date on important information and follow announcements carefully by regularly checking their university emails and the learning management system, SUCourse Plus. Students also respect social rules such as not talking while others are speaking, not playing with a mobile phone in class, etc.

Students care for the safety and well-being of others as much as their own. They avoid disruptive classroom behaviour so that class and tutorial times are used effectively and productively. Students complete both assessed and unassessed work on their own and adhere to standards of academic integrity. Students follow copyright policies and use original copies of course books, in accordance with laws and regulations. During assessed tasks, they act in accordance with the exam rules, and avoid any action that can violate academic integrity. They take good care of their learning surroundings and school property.

SL learners commit to the same standards of behaviour both in face-to-face and in virtual learning environments. Online sessions are recorded and uploaded on section SUCoursePlus or Google drives by SL instructors as part of YÖK requirements and for educational purposes. It is strictly forbidden for students to record, take photos of, or share lessons or materials with others unless permission is granted by their instructors.

If a learner does not adhere to the SL Learner Conduct, they may be referred to the SL Directorate or the University Disciplinary Committee.

SL Guidelines for Breaches of Learner Conduct

1. When a problem behaviour occurs, the first step is to have a brief, informal discussion with the learner outside the class. The instructor describes the issue and asks the student for their perspective. The instructor then explains why the behaviour is not acceptable; and asks the learner to discontinue the behaviour.

2. If the problem persists, the instructor invites the learner to a meeting. At the meeting the instructor explains why the behaviour is not acceptable, and the effect the behaviour has on learning, other learners, or the instructor. The teacher also listens to the learner and they draw up an action plan together so that

the negative behaviour is replaced with a positive one.

3. If the problem is of a serious nature and persists, the teacher fills in an official report form, and submits it to the Program Coordinator. The Program Coordinator invites the learner to a meeting, and explains to the student the potential consequences if the behaviour persists.
4. The Program Coordinator may decide to gather additional information if they deem it necessary.
5. If the problem behaviour does not improve, the instructor completes an incident report form, and submits it to the Program Coordinator, who may initiate a disciplinary process. Depending on the problem behaviour, the disciplinary process can start at an earlier stage.

The procedures, rules and regulations for student discipline can be accessed through the following links:

https://mysu.sabanciuniv.edu/surecharitasi/en/prosedur/disciplinary-procedure-students-psr-c210-0101

https://mysu.sabanciuniv.edu/surecharitasi/en/yonerge/instruction-letter-student-discipline-isr-c210-01

Please also see relevant Sabancı University policies at the following links. Any violation of the principles outlined in this document or in any of the links may result in disciplinary action.

https://www.sabanciuniv.edu/en/academic-principles

https://www.sabanciuniv.edu/en/statement-academic-freedom

https://www.sabanciuniv.edu/en/academic-integrity-statement

https://www.sabanciuniv.edu/en/scientific-and-applied-research-misconduct

https://www.sabanciuniv.edu/en/non-discrimination-statement

https://www.sabanciuniv.edu/en/sexual-harassment-policy-statement

https://www.sabanciuniv.edu/en/node/41

2. Attendance

Attending classes and individual / group tutorials is a vital part of your learning experience at the SL. You are expected to attend all classes and tutorials, and be ready to start work in time for your lessons each morning without being late. You are expected to attend all classes and tutorials, and be ready to start work in time, without being late for class. You are expected to attend classes regularly, including the first and last days of the course.

If you miss your class for health reasons or an emergency, you need to inform your instructor beforehand if it is possible and if not, on the day following your absence. If the medical report is obtained from a medical institution other than the Sabancı University Health Centre, it has to be approved by the doctors at the University Health Centre within 3 working days following the end of the medical report. During the online education period due to the pandemic, the medical reports obtained from a medical institution other than the Sabancı University Health Centre have to be sent to Sabancı University Health Centre by email. When the medical report is approved,

students do not need to take any other action since SU Health Centre informs the class instructors about the approval of the medical report by email. However, if there is an FDY exam on the days when the student has a medical report approved by the SU Health Centre, a make-up petition form should be given or emailed to SL Administrative Office within 3 working days following the end of the medical report. (E.g. If the medical report expires on Tuesday, the deadline to send the documents via Su Form Friday by 5 p.m.) Please note that there is no make-up for Learning Portfolio tasks.

**Please see the 'Health Reports and Exams' section.*

3. Class participation

You are expected to complete all classroom and tutorial tasks to the best of your ability. This includes full participation in joint activities with classmates and positive behavior that will help you and other students to learn. You are also expected to bring all course materials, including dictionaries, and pens/pencils and paper every day, as well as your laptop on the specific days your instructor requests.

4. English language

In the FDY Intensive English Program, the medium of communication is English. All classes will be conducted entirely in English. The classroom is one of the few places where you will have the opportunity to listen to and speak English. Therefore, it is important that you always use English in lessons and that you try to use English whenever you meet your instructors at other times outside of class.

5. Homework

Your instructor will give you work to do outside class. You are expected to complete all homework on time. It is also important to complete homework in order to be able to fully participate in the lessons.

6. Statement of Academic Honesty

For full details of the rules and regulations please see, 'Principles of Academic Integrity' in the instruction letter,
http://mysu.sabanciuniv.edu/surecharitasi/sites/mysu.sabanciuniv.edu.surecharitasi/files/akademik_durustluk_eng.pdf

Please note that your assessed work should conform to the standards of academic honesty. Academically inappropriate behavior includes incorporating other people's ideas or information in essays without acknowledging the source, having your assignment done by somebody else, or doing somebody else's assignment. These are considered serious academic offences, and any suspected examples of these infringements will be examined by committees of FDY English may result in penalties ranging from loss of credit to referral to the university disciplinary board.

7. Assignment deadlines

Throughout the year you will be required to submit a number of assignments for assessment. You will always be given enough time to complete your assignments; therefore, all work MUST be handed in before the official deadline. Any work submitted late **will not receive a full grade.** Computer failure, printer problems and other technical difficulties are **not** valid excuses for late work. Make sure that you complete your work and print it out one day before the official deadline.

8. Health Reports and Exams

For students who are unable to take FDY exams, it is HIGHLY IMPORTANT to follow below steps:

a) We would appreciate it if you could contact the main instructor of your class either through e-mail or by telephone 1 day before the exam at the latest; or for **urgent, unpredictable situations,** and if you are only able to call on the day of the exam, please telephone the Administrative Office of the School of Languages.

b) If you reside on campus, please seek necessary **medical treatment at the University Health Center** and obtain a health report from them. Then University Health Center will inform the instructor of the course through e-mail.

c) If you reside outside the campus and receive **treatment in an approved medical institution other than the University Health Center**, obtain a health report from there and have it approved by the doctors at the University Health Center.

Please click on the link below and read SU Health Center's Guidelines for Student Health Reports* carefully.
http://mysu.sabanciuniv.edu/surecharitasi/en/yonerge/guideline-student-medical-reports-o

d) Any health report should reach the School of Languages Administrative Office within **3 working days** following the end of the medical report, and be accompanied by a **PETITION**.

The School of Languages Committee will decide if a student can take a make-up exam(s) due to health reasons or for urgent, unpredictable situations and the decision will be announced to the students by the Administrative Office.

9. School of Languages Student Bereavement Policy

The School of Languages recognizes the impact that a death in the family can have on learners' academic studies and supports them. The School of Languages provides the rights outlined below to students facing the loss of a family member.

Students are eligible for a specific number of excused days of absence, determined by their relationship to the family member lost. In order to be eligible for excused leave in the event of a loss in immediate family member, the student must write a petition and provide necessary documentation. Documentation required for excused absences may include death notice, obituary, or death certificate. The documents can be provided after the bereavement leave is over. The documents must be provided with a petition to SL administration via SUForm. Upon receiving the petition and the proper documentation regarding the death and relationship, the SL Administrative Affairs Officer communicates the necessary actions to be taken to the student's instructors. The SL Administrative Affairs Officer may ask for additional documentation if necessary.
The student is responsible for notifying their teacher(s) and for submitting the necessary documentation immediately after their return, and getting in contact with their instructors regarding any in-class work they have missed as well as any other required work or assessment.

Instructors will excuse the student from class, and provide the necessary materials and the guidance so that the student can complete the missed class work. The instructors will also make the necessary arrangements to make up for any missed assessed or required work.

Students are entitled to up to seven days of bereavement leave in the event of death of a parent, spouse, or a sibling.

Students are entitled to 1 day of absence in the event of a death of a grandparent, aunt, uncle, niece, nephew or first cousin. If the funeral service takes place in a different city, students are eligible for one additional day of excused absence for travel considerations.
In the event of the death of a relative not explicitly stated in this document, a student should submit a petition for bereavement leave through SUForm for case evaluation by the SL board.

We know that a time of loss of a family member is a very difficult time, and therefore, we are here to support our students. In order to deal with grief, students are also encouraged to contact health center to receive emotional support.

10. Objections to Grades

If you would like any exam result to be remarked you need to give in a petition to the School of Languages Directorate. For ELAE results, the petition must be handed in within three working days of the release of grades, for any other exam the PETITION must be handed in within 5 WORKING DAYS OF THE RELEASE OF EVALUATION RESULTS.

11. Mobile phones

Mobile phone use is not permitted during School of Languages classes unless explicitly allowed by the instructor. Students must either place their phones in the designated phone box at the beginning of the class or keep them switched off and out of sight in their bags.

12. Smoking

Smoking is *strictly forbidden* inside the SL building. Please fully exit the building if you would like to smoke. Please do not smoke inside the non-smoking area.

13. School of Languages Student Complaint Policy and Procedures

Policy
Our school ethos is based on a happy, positive and learning-oriented culture, which receives its strength and vigour from collaboration and teamwork; openness to and sharing of new ideas; an emphasis on the individual as well as teams; respect for diversity and flexibility; and a flat hierarchical structure with collaborative decision making. The SL is committed to promoting healthy relationships in an environment of respect, trust, support and appreciation where all members feel able to share issues with each other and with the director.

At the School of Languages, we believe that our staff and learners have the right to express their opinions openly and freely, within a culture of mutual respect, tolerance and civility. Different opinions are appreciated as long as they do not lead to discrimination* of any kind. SL instructors follow SL principles, procedures, rules and regulations, and provide high quality instruction to all learners. They are firmly committed to ensuring equal opportunities for and fair treatment of all students.

Students who are concerned about others' adherence to SL policies, rules and regulations can express their viewpoints through informal counselling or formal complaint processes.

Procedures

Informal resolution procedures: As the School of Languages, we believe most complaints can be resolved through honest and open communication, mutual respect and good will. For this reason, when a student has a complaint about SL policies, procedures, resources and the learning environment, they are advised to discuss these with their teachers. If they would like to, they can also share their complaint with the Program Coordinator. When a learner has a complaint about an individual, the first step they are requested to take is to share their frustration with the person/people their complaint is/are about, and attempt to resolve the issue informally.

When a student approaches a staff member with an informal complaint, the staff member is committed to resolving the issue informally in an open, fair and professional manner, and to taking prompt action. If the issue is not resolved through this informal process or when it is not possible or feasible to have an informal discussion with the staff member(s) concerned, the student requests a meeting with the Program Coordinator.

The SL Program Coordinator may act as a mediator in helping resolve disputes between/among students and between students and staff members.

This does not apply to allegations regarding harassment or discrimination. If students are uncertain about how to proceed with their complaint, they may consult the Program Coordinator for guidance.

Formal resolution procedures: There may be cases when a formal process is necessary because the issue is such that it cannot be resolved through informal discussion. In such cases, the learner makes an appointment to talk with the Program Coordinator. After the discussion, if the learner would like to proceed with their complaint, they fill in a complaint petition to the SL Directorate. If the issue involves an SL staff member, the SL Director or the Program Coordinator informs the SL staff member concerned, and requests a written report from them with any necessary information including any previous actions taken. A relevant member of the SL Directorate gathers other data that may be useful and may request additional information from the individuals involved. The Director or the Program Coordinator may choose to invite the student and the staff member(s) for a formal meeting. The Program Coordinator or another staff member also joins the meeting to take minutes. The Director or the Program Coordinator then responds to the student in writing within 15 working days, informing the student of the outcome of the complaint.

In their petitions, students must include the following information:

- contact information
- detailed description of the complaint
- steps already taken to resolve the issue informally and outcomes.

Other important information:

- All students and staff members involved in the grievance procedures must observe confidentiality during the whole process. Depending on the nature of the concern or issue, the SL Director may decide to gather relevant facts or information to address the issue fairly and in a timely manner.
- The SL Directorate keeps a record of all formal student complaints and their resolution, and ensure the confidentiality of these reports.
- The decisions taken by the Directorate are considered final and there are no further appeal mechanisms within the SL. However, if the student wishes to appeal the decision, or if they are unable to resolve their issue with the

SL Directorate, they may write to the President's Office Administrative Process Specialist, Kadriye Huysal Özgöçmen at: rektorluk@sabanciuniv.edu for their grievance to be communicated to the University Executive Board.

- For other grievance procedures, such as grade objections, please follow the procedures and guidelines in the relevant student handbooks and the instruction letters.
- If students are unsure about how to proceed with your grievance, they may contact the Program Coordinator to ask for guidance.
- Students are also reminded about the university's statements and policies for non-discrimination, sexual harassment and academic integrity:

https://www.sabanciuniv.edu/en/academic-integrity-statement https://www.sabanciuniv.edu/en/non-discrimination-statement

https://www.sabanciuniv.edu/en/sexual-harassment-policy-statement

https://sl.sabanciuniv.edu/sl-blogs/sl-anti-discrimination-policy-do-ayrimcilikla-mucadele-ilkesi

- In cases where the complaint may involve disciplinary action, students are advised to refer to:

https://mysu.sabanciuniv.edu/surecharitasi/en/prosedur/disciplinary-procedure-students-psr-c210-0101

https://mysu.sabanciuniv.edu/surecharitasi/en/yonerge/instruction-letter-student-discipline-isr-c210-01

https://mysu.sabanciuniv.edu/surecharitasi/tr/prosedur/psr-c210-0101

https://mysu.sabanciuniv.edu/surecharitasi/tr/yonerge/isr-c210-01

Some Guidelines for Effective Communication

SL believes that in order to achieve and maintain healthy relationships, we must have open and effective communication with others. Please remember that most conflicts can be prevented or resolved through effective communication, which involve:

- a positive atmosphere
- trust
- flexibility
- empathy
- growth opportunities
- fairness
- willingness to take others' opinions into account

Talking About Frustrations

When you need to express your complaint, you may refer to these guidelines.

- When preparing to talk about frustrations with the person who you think is the source, keep an open mind; do not jump to conclusions about the person or the reasons behind their behaviour (assumicide). Give them the opportunity to explain.
- Ask for permission to talk about the topic.
- Agree to meet at another time if the person is not ready to talk to you when you first bring up the topic.
- Speak in private.
- Start by describing the gap between what you expected and what you observed or what happened.
- Give the facts as you know them.
- Share your interpretation.

- Ask the other person to give their point of view.
- Actively listen to what the other person has to say.
- If it becomes apparent that you have made a mistake, admitting to it and apologising can help improve the situation.
- If you still feel justified in your frustration, give the other person time to reflect on what you have said and to improve the situation.

Reference
Patterson, K., Grenny, J., McMillan, R., & Switzler, A. (2012). Crucial conversations: Tools for talking when stakes are high (2nd ed.). [Kindle version] Retrieved from Amazon.com

Receiving Feedback

For effective communication, it is also important that we are open to receiving feedback. If someone wants to talk about something that has been frustrating them:

- listen to them as openly as you can;
- try not to get defensive;
- try not to respond, just listen, until they have finished;
- make sure you have understood what they are saying by paraphrasing and checking with them;
- if they are focusing on opinions rather than facts, ask for examples;
- if you need time to reflect on what they have said ask for it;
- if your emotions are highly engaged, give yourself time to reflect on the accuracy of the message;
- if you have asked for more time, schedule another meeting to give your side of the story;
- if on reflection you feel that an apology would be appropriate, make a sincere apology;
- if you don't feel that the person is justified in feeling frustrated, explain your interpretation of the situation;
- give the other person time to reflect on what you have said.

Reference
Patterson, K., Grenny, J., McMillan, R., & Switzler, A. (2012). Crucial conversations: Tools for talking when stakes are high (2nd ed.). [Kindle version] Retrieved from Amazon.com

Frequently Asked Questions (FAQ)

1. Academic Issues

What materials will I be using to learn English during my time in the SL?

The SL has designed and produced its own set of coursebooks, "Beyond the Boundaries", Above and Beyond which are the books mainly used at all Routes. "These coursebooks" are both content and skills based and focus specifically on the academic skills of listening, reading, speaking and writing as well as on study skills. In addition to these coursebooks, you may be using supplementary books for language (grammar and vocabulary) and/or skills development. You will also be using a wide variety of tailor-made supplementary materials. These are selected or created by your instructors according to your particular academic needs.

How can I practise my English outside the SL?

Regularly check the announcements on the University`s internal website for the workshops, seminars, guest lectures, films etc. that are being held on campus in English. Once you start to look for these opportunities you will realize that there are many.

Also, the Information Center (IC) is a wonderful resource for practising your English. It is stocked full of electronic sources and English books specifically written for learners of English for you to borrow. The IC also has reading and listening comprehension books with answer keys and CDs so you can test yourself.

As Sabancı students, you also have access to ***SUCoursePlus*** an online Collaboration and Learning Environment which supports the SL courses you will be taking (see Part 2 of FAQ for more details about ***SUCoursePlus***).

The Internet is another rich resource that offers endless language learning and practice opportunities. The SL website (http://sl.sabanciuniv.edu/) designed for FDY students includes weblinks, podcasts and study tips. There are also numerous other websites for practicing grammar, reading newspapers, and listening to audios and podcasts. Your instructors will provide you with many helpful websites available.

What additional academic support is available?

In addition to the required tutorials focusing on your assessed writing and your progress, individual tutorials with SL instructors are always available for students at all levels of the program. For example, you can ask for extra grammar support, you can discuss your learning strategies or you can ask for clarification on anything that you have studied but still have questions about. All tutorials are held after formal class time and are a great opportunity to receive some one-to-one assistance. Although all SL instructors and the SL Director have an 'open door' policy, in order to ensure availability for additional support, please make an appointment.

The Center for Individual and Academic Development (CIAD) also offers support and houses Academic Communication (AC). Academic Communication helps students develop their academic English and critical thinking. AC supports the development of reading, writing, listening, and speaking. FDY students can get support from AC in individual tutorials or small study groups.

AC provides workshops to FDY students during class hours.

I would like to learn a second foreign language. Can I take a second language course?

You can take a second foreign language in your Freshman year but **not** in your Foundations Development Year. This is because you need to devote a considerable amount of time to the required academic load in your FDY studies. However, those of you who successfully complete FDY studies can take courses in French, German, Arabic, Ottoman Turkish, Persian or in the Spring term.

2. Technology Related Issues

I am not very good with computers. What kinds of services does the Information Technology (IT) unit offer to students like me?

The IT department offers a wide range of support for students. The official IT website link is located on the MySu portal (http://mysu.sabanciuniv.edu/it/en). There you will find many answers to frequently asked questions as well as a link for 'Students' under 'New Users'.

What is *SuCourse* and how does it benefit me?

SuCourse is a course management system which is basically like a virtual classroom and used at Sabancı University to support all University courses. When you log onto ***SuCourse*** you will find several tabs. One of them will be for your Level (Route 1,2,3,4) & another one will be for your Section.

This platform contains your course information, materials that supplement your course books as well as self-study activities to develop your reading, writing, listening and language skills. There are also links to other recommended sites where you can practice your language and study skills. In addition, you will be able to find and listen to the course book audios using your Level ***SuCourse***.For some courses, ***SuCourse*** is also used as a forum for web-based discussions and postings. As ***SuCourse*** is available 24 hours a day, 7 days a week, you will have the opportunity to review, revise and learn on your own or with a study partner – anytime.
At the beginning of the semester you will be registered automatically on ***SuCourse*** pr OLSP team will introduce you to the ***SuCourse*** site for your course.

What are the printing facilities offered on the campus?

You can use photocopier machines in the campus to print or copy your documents by sending to suprint@sabanciuniv.edu email address.

3. Social and Individual Support

I feel very stressed out and don't feel that I am doing well in adjusting to university life. I would like to talk to someone. Where should I go?

The Center for Individual and Academic Development (CIAD) offers free individual counseling to all Sabancı University students. A counsellor will be assigned to you by CIAD to help you throughout your first year.

You also can make an appointment for a confidential individual session with a CIAD counselor by clicking the link here.
https://abidp.simplybook.me/sheduler/manage

Counsellors will be happy to provide you with individual support in matters regarding university life, social relationships, emotional issues, time management, exam anxiety, etc. If you feel overwhelmed or just need some advice, make an appointment with them. If you are unable to contact them for any reason, please visit CIAD in the University center on the first floor.

You will also have a tutor throughout your Foundations Development Year. Your tutor will be an instructor from the SL. They will always be available to assist you in your learning and point you in the right direction particularly in academic matters.

You can also attend any group sessions, workshops, etc. organized by CIAD on a variety of topics. Information on these activities is announced on the internal website.

I feel a bit isolated since the campus is so far away from the city. What kind of activites can I get involved in during the evenings on campus?

Sabancı University has approximately 75 student clubs on campus, as well as a wide range of evening and afternoon sports activities that are offered to both students and faculty. You may get involved in various activities ranging from learning to play bridge, to horseback riding, sailing and debating. Also, with a minimum of 5 students, it is possible to form a new club on campus.

For information on the campus sports activities, please visit the below websites.
http://www.sabanciuniv.edu/spor/tr
https://clubs.sabanciuniv.edu/

The University also has its own Performing Arts Centre (Sabancı Gösteri Merkezi) which offers an opportunity for you to enjoy performing artists and groups, including concerts, dance performances and plays. As well as performances, it organises activities for you to get involved in cultural and artistic pursuits.

Please refer to the following link for more detailed information on what the Centre offers:
http://sgm.sabanciuniv.edu/

All social activities are announced on http://mysu.sabanciuniv.edu/en. Make sure you check the announcements regularly.

Foundations Development Year
English Program Exit Level Descriptors

	ENG 0001 (A2)	ENG 0002 (A2+)	ENG 0003 (B1)	ENG 0004 (B2)
General linguistic range	Has a limited repertoire of short memorised phrases covering predictable situations; frequent breakdowns and misunderstandings occur in non-routine situations. Can use basic sentence patterns and communicate with memorised phrases, groups of a few words and formulae about familiar topics under study.	Has a repertoire of basic language which enables him/her to deal with predictable classroom situations. Can give short descriptions and make simple claims on factual topics under study.	Has sufficient language to be able to give clear descriptions and make and support claims on factual topics under study, using some complex structures to do so.	Has sufficient language, including a range of complex structures, to be able to give clear detailed descriptions, present claims and develop arguments in most academic situations.
Overall listening omprehension	Can understand phrases and expressions related to familiar topics provided speech is clearly and slowly articulated.	Can understand the main claims made in standard speech, provided it is clearly articulated and the speaker is sympathetic to the language ability of the listener.	Can understand straightforward factual information about topics under study, identifying general messages and specific details, provided speech is clearly articulated in a familiar accent.	Can understand the main claims of propositionally and linguistically complex speech on both concrete and abstract topics delivered in standard dialect.
Overall Spoken Interction	Can communicate in simple routine tasks requiting a simple and direct exchange of information on familiar topics under study. Can handle very short social exchanges but is rarely able to understand enough to keep conversation going of his/her own accord.	Can interact with reasonable ease in structured situations and short conversations, provided the other person helps if necessary. Can convey a simple overall message, despite frequent language errors and frequent hesitations.	Can communicate with some confidence on familiar topics under study. Can connect ideas together most of the time at a varying speed to convey a clear message, despite some pauses and language errors and slips.	Can interact with a degree of fluency and spontaneity that makes interaction with speakers of standard English quite possible. Can connect ideas together coherently at a fairly natural speed, with occasional unobtrusive language errors or slips.
Overall Reading Comprehension	Can read short, simple texts containing the highest frequency vocabulary.	Can read extracts from simple coherent texts on familiar topics of a concrete type which consist of mainly high frequency vocabulary.	Can read coherent introductory texts on factual topics under study and can extract the overall meaning and locate relevant details when directed to do so.	Can read independently in a university context, adapting style and speed of reading to different texts and purposes, and using appropriate reference sources.
Overall Written Production	Can write a series of simple phrases and sentences linked with simple connectors.	Can write connected texts with reference to knowledge from previously read or heard texts, consisting of a series of phrases and simple sentences.	Can write coherent texts with reference to previously read or heard texts, using some complex language.	Can write clear, detailed texts on a variety of topics under study, and of a length and organisation suitable to their purpose. Can also synthesize and evaluate information and arguments from a number of sources to do so.

Foundations Development Year English Program
Route Progressions Maps

1. All Routes - Route Progressions

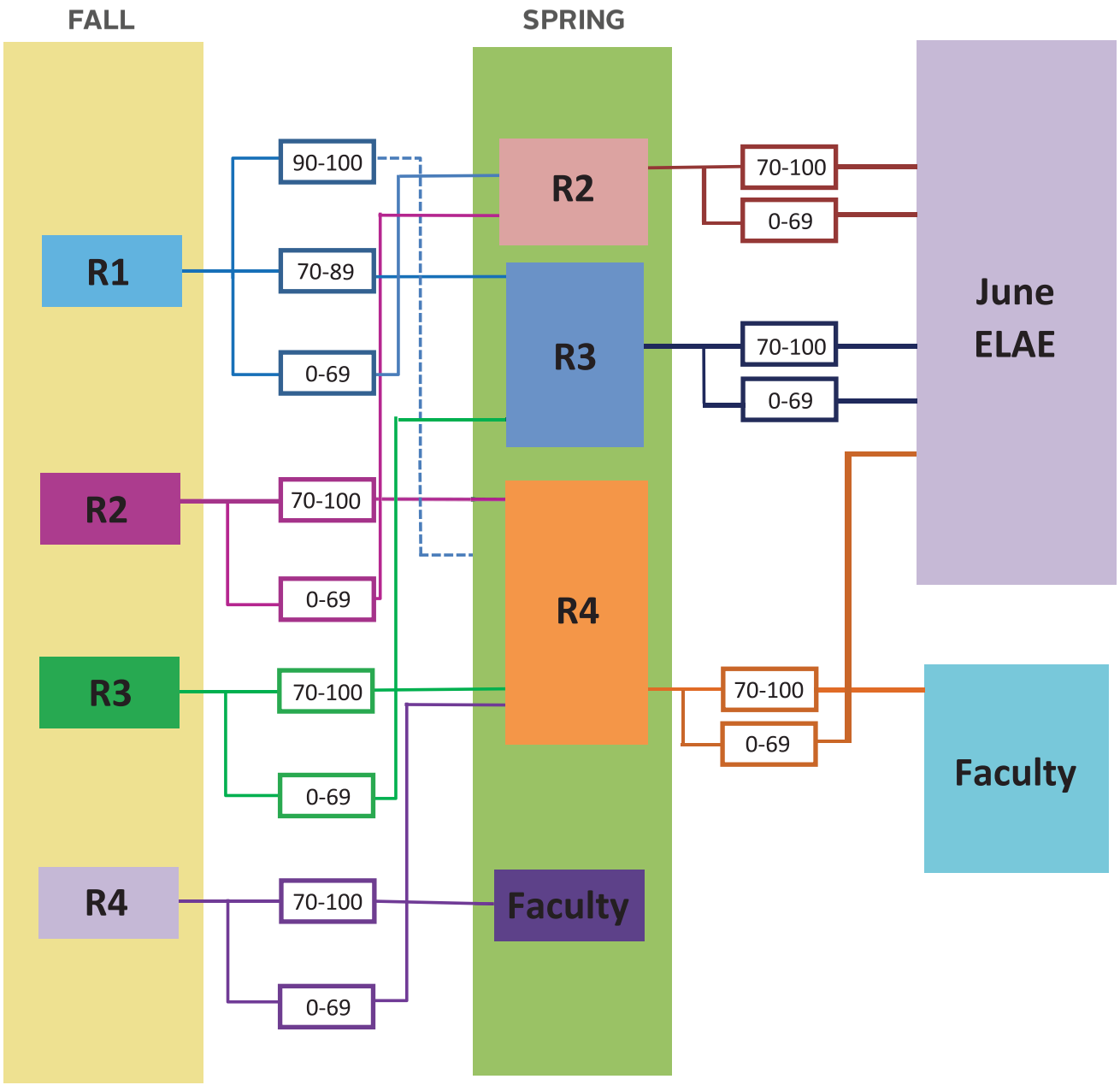

The right to study in Foundation Development Year summer school is given to:

- Students who successfully complete Route 2
- Students who do not complete Route 2 successfully but who score a grade "D" in the ELAE at the end of Spring Semester
- Students who successfully complete Route 3
- Students who do not complete Route 3 successfully but who score a grade"D" in the ELAE at the end of Spring Semester
- Students who do not complete Route 4 successfully

2. Route 1 Fall → Spring Progressions

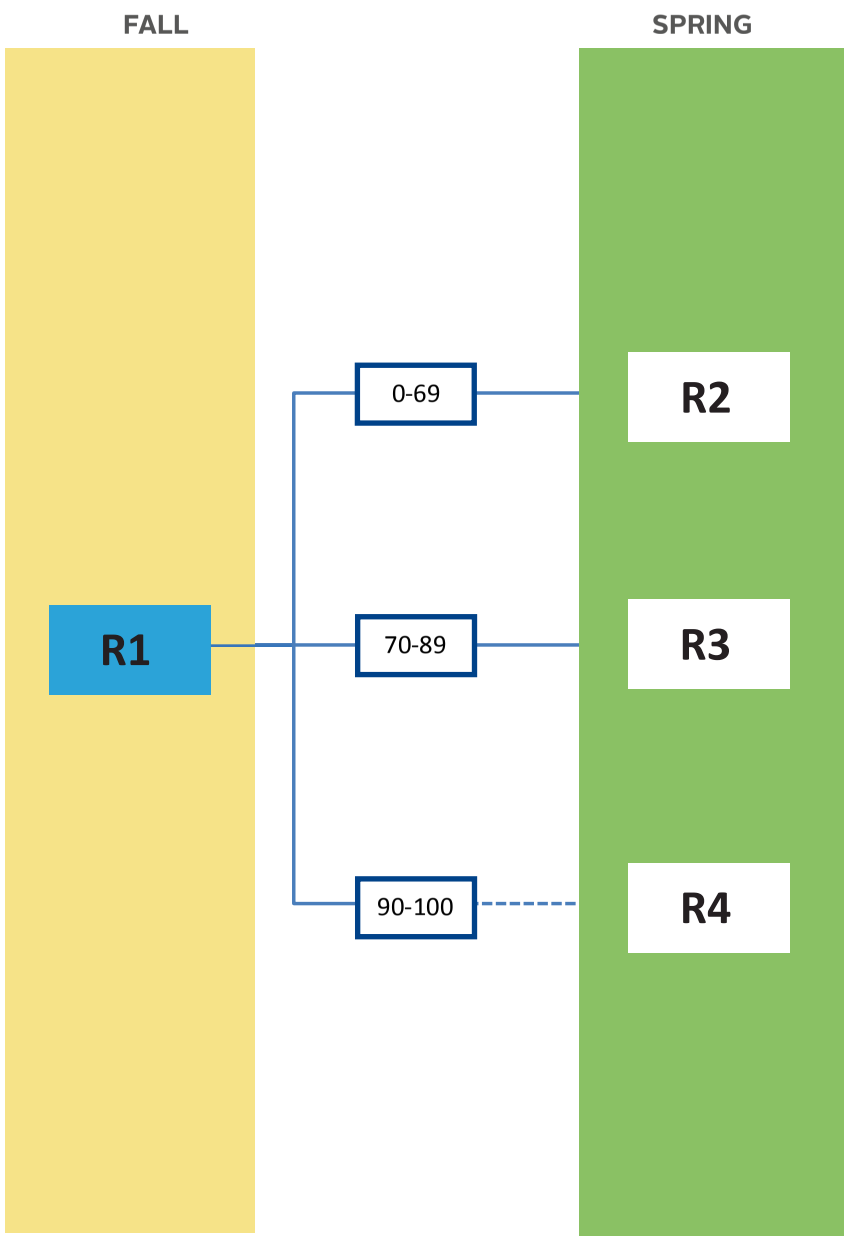

3. Route 2 Fall → Spring Progressions

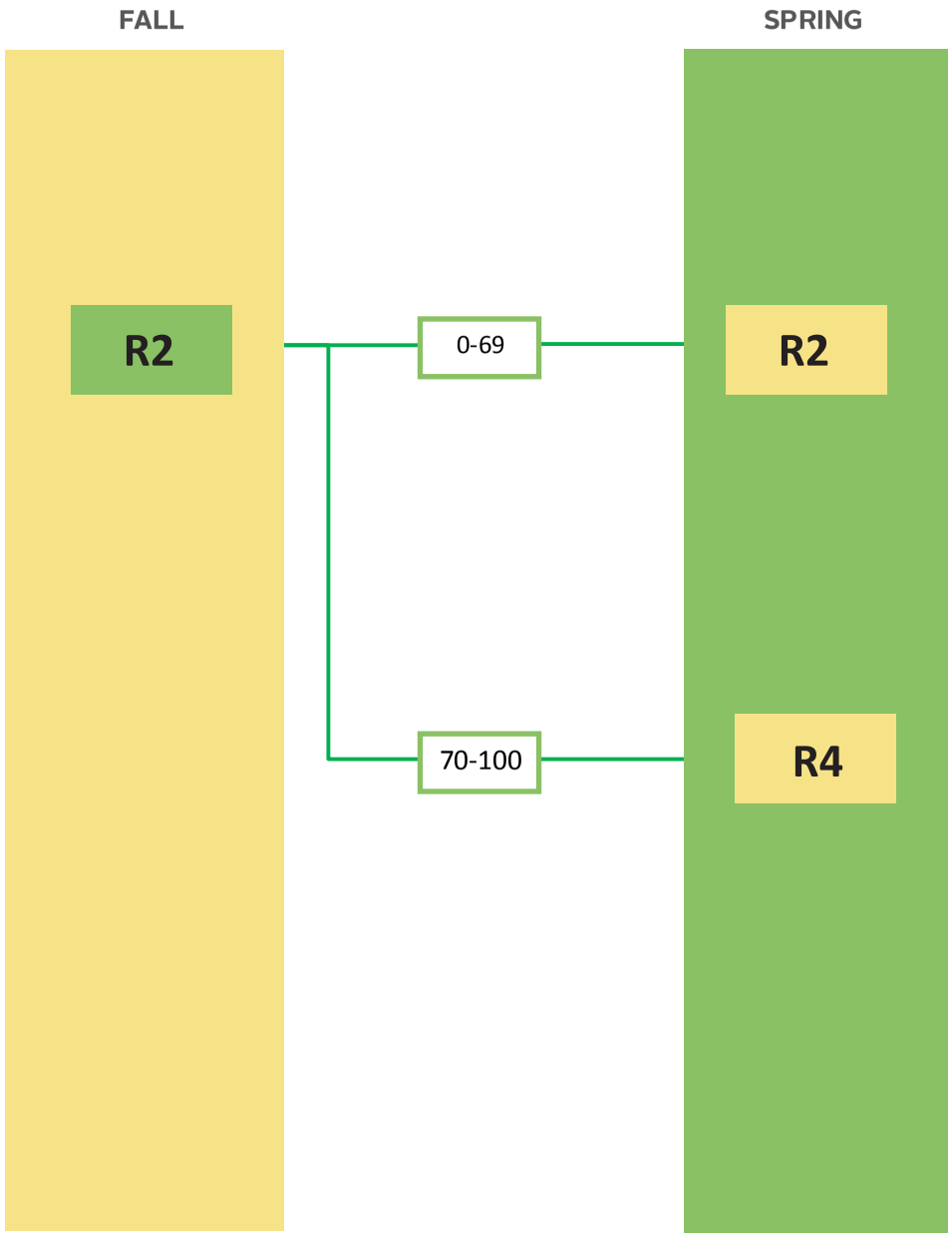

4. Route 2 Summer Progressions

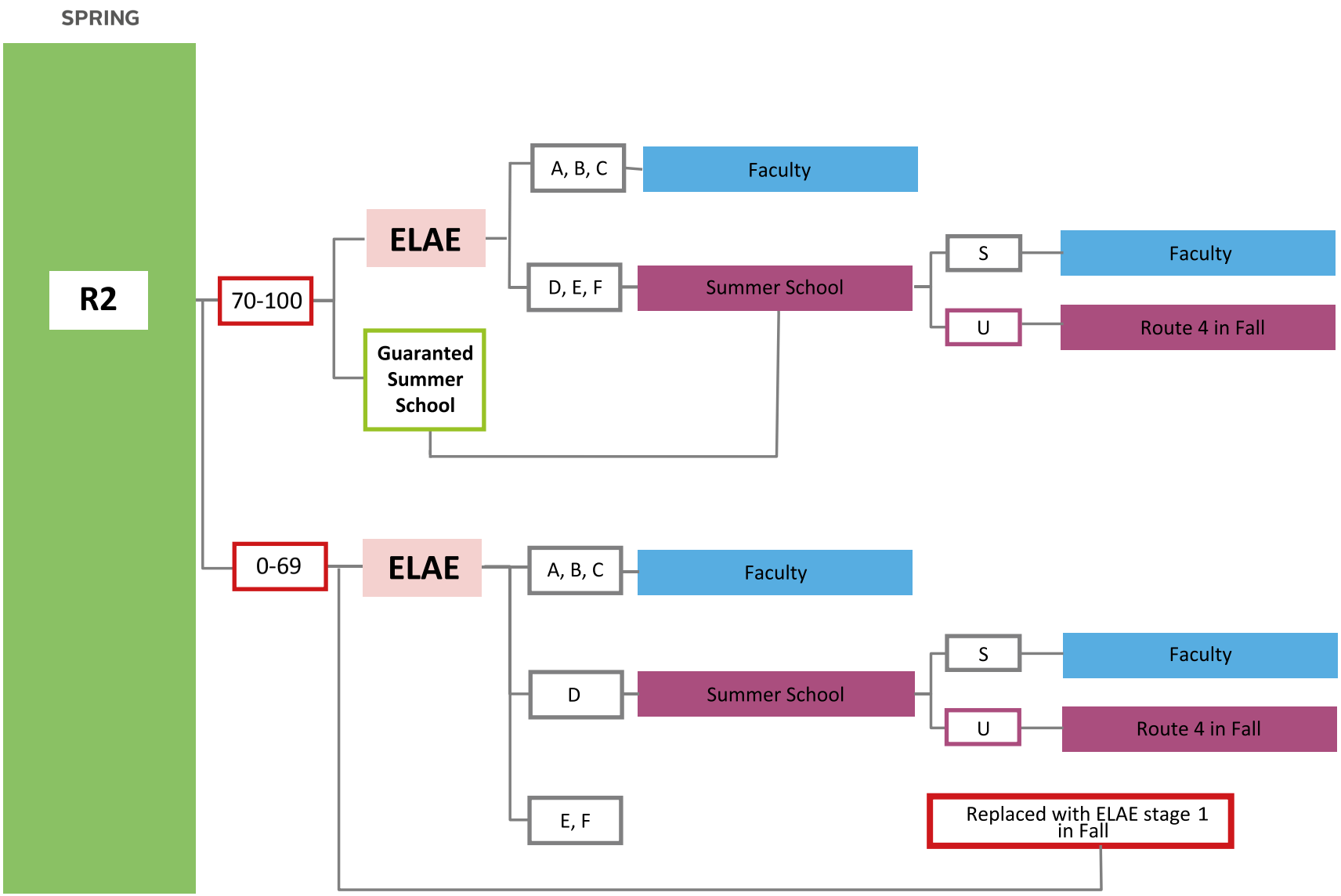

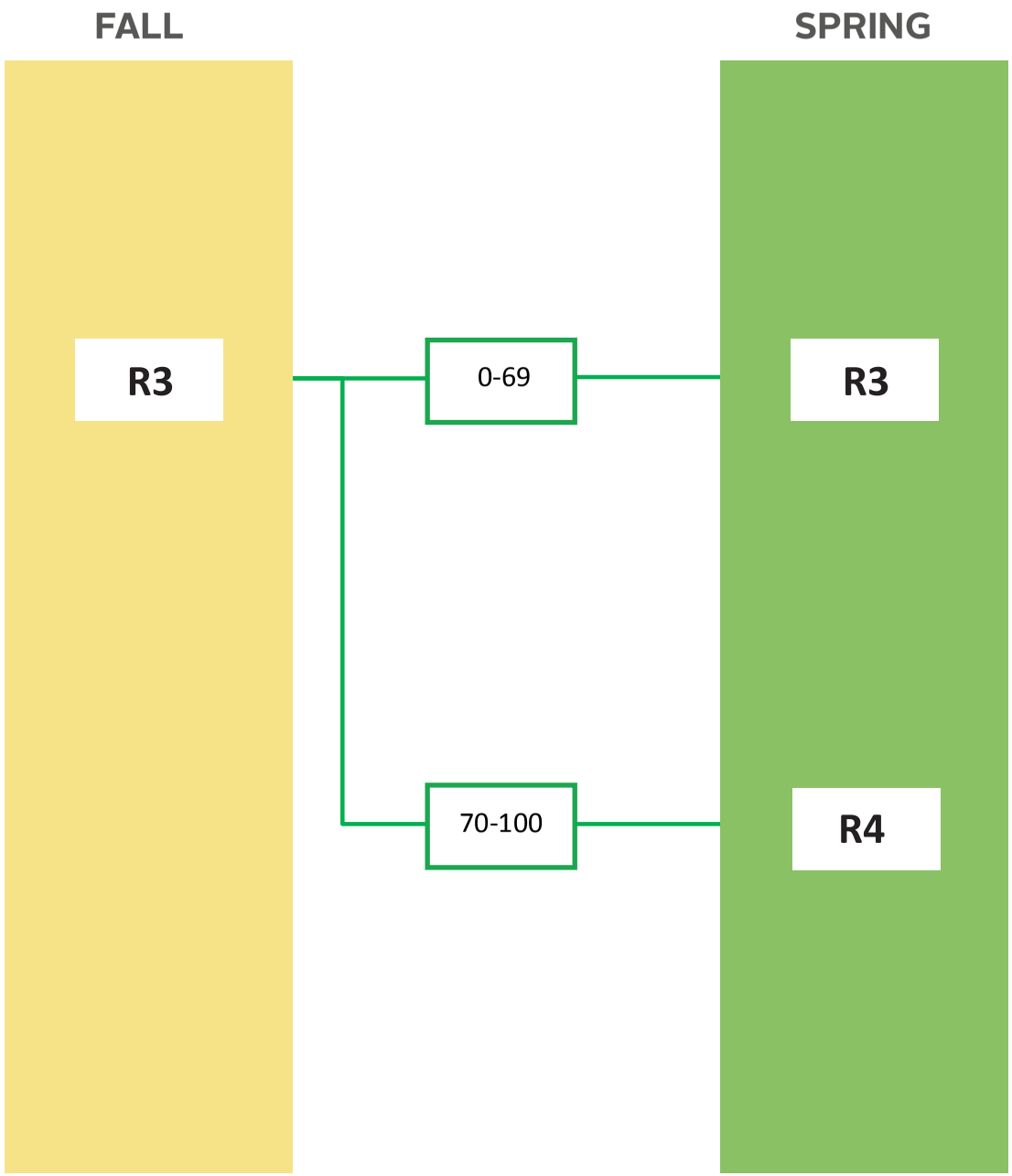
FALL
SPRING
R3
0-69
R3
70-100
R4

6. Route 3 Summer Progressions

SPRING

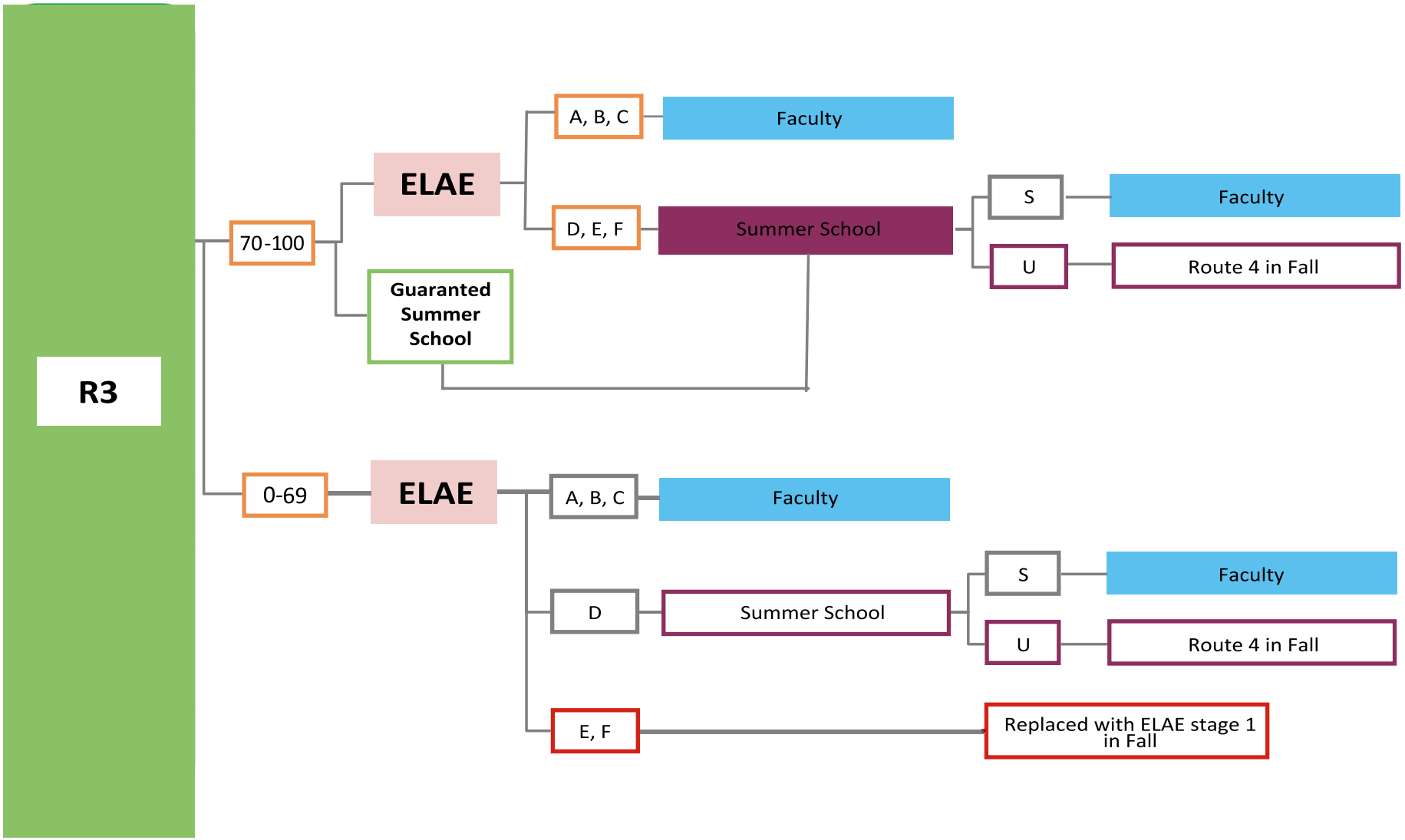

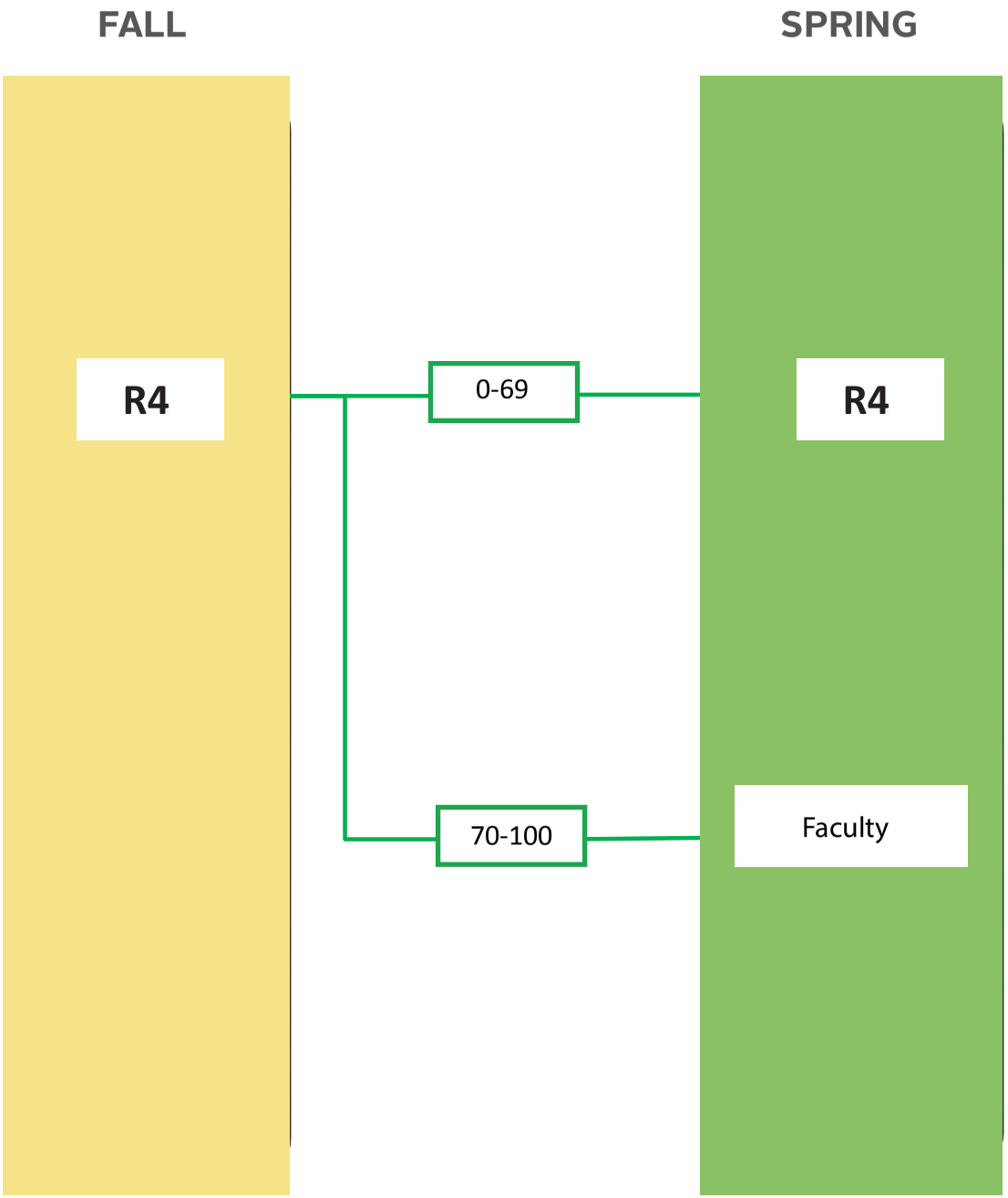
FALL
SPRING
R4
0-69
R4
70-100
Faculty

8. Route 4 Summer Progressions

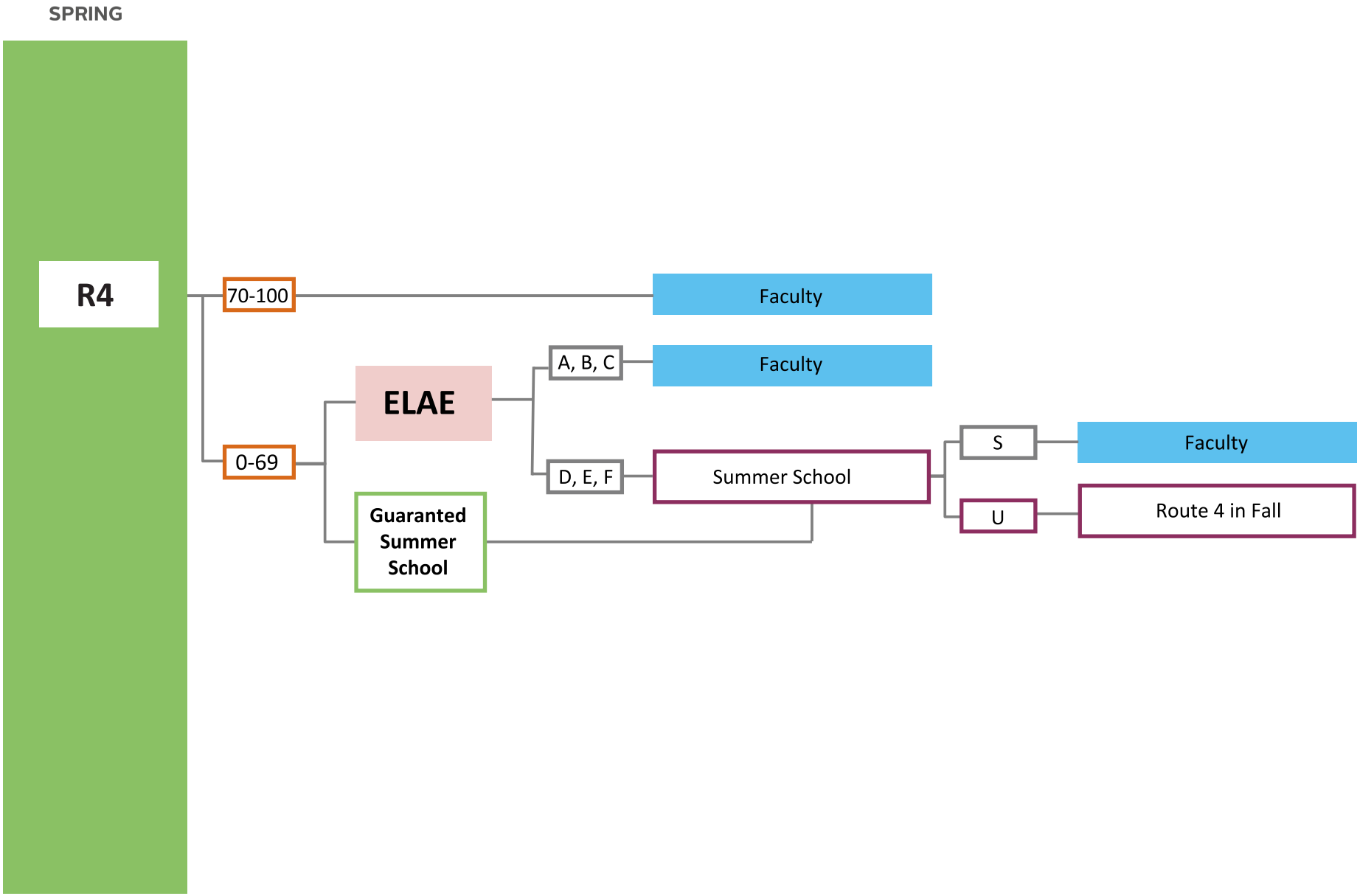

Overview of Route Progressions & CEFR Levels

Taner Aytun - *Basic Starter*

First of all I have to say that Sabancı University, School of Languages expects high quality work from students. I think this is to the students' benefit. With an advanced command of English we will be more successful (may be privileged and have an advantage over the others) both in our faculties and future life.
Since the beginning of the semester we really improved our reading, writing and listening skills and enriched our vocabulary and grammar knowledge and, as a natural result of all of these, we improved our speaking abilities. While learning the skills mentioned above, our instructors guided us on how to reach our aims and left the rest to us. We understood that success is in our hands, which is quite different from what we experienced in high school. During this preparatory period we tried to adapt to university life. With the help of small class sizes we were able to build good friendships.

Ceren Saygı - *Basic Starter*

I think SUCourse helps us a lot to learn English and improve our reading, listening, vocabulary and grammar. I used SUCourse links quite often for self-study so thanks to our laptops and our teachers.

Gülan Barçın Çağlar - *Upper Starter*

My studies at the SL are helping me in many ways such as the vocabulary knowledge and reading strategies I gained, which help me a lot in NS, MATHS and Arts&Social Sciences courses. They also help me to understand SPS. Both ENG & TLL courses help me in writing academic essays.

Sinan Büdeyri - *Intermediate Starter*

It may seem like the main achievement of this course is passing the ELAE. However, this course is not for passing exams, but is useful for your entire academic life.

Başak İçten - *Basic Starter*

It's been one of the most pleasant school years. The joy of learning English and the nice attitudes of our instructors have made it possible for us to cope with this difficult year.

Ceyhun Işıkel - *Basic Starter*

Taking French lessons at high school has made me more experienced in learning languages. That's why, I can make comparisons. I believe that the teaching techniques are up-to-date and the teachers are very successful. Teachers give importance to equality in every respect. I have also benefited a lot from SUCourse during the course.

Ebru Hüsrevoğlu - *Intermediate Starter*

My English really improved. I feel I have improved in reading, writing, speaking and vocabulary. It's not just that I feel it, but this is so evident and clear. I have now come to a stage where I can read articles which I would definitely not have been able to read before. The discussion opportunities were also very effective in terms of helping me develop my thinking and my English.

Aydan Uyar - *Basic Starter*

FDY courses were very effective in developing reading skills. Thanks to FDY, I don't have difficulties in reading; in SPS, for example, I can easily guess a vocabulary item in a text from context.

At the link below, you can find video recordings of FDY students sharing their individual experiences on language learning and all the work aimed at helping them with their academic studies in their faculties which sheds light on how to succeed as a newly registered student. Below are some of the topics mentioned:

- effective classroom participation
- outside class study time
- effective time management
- life in the dormitories
- social life on campus
- adapting to university culture
- differences between studying at high school and university
- balancing academic and social life

We are hoping that our new students find the information in these videos helpful.

https://sl.sabanciuniv.edu/our-students-videos

Sabancı Üniversitesi

Sabancı University
Orta Mahalle, No:27
Tuzla-İstanbul
+90 216 483 90 00
www.sabanciuniv.edu
info@sabanciuniv.edu